AWS Solution Architect Training with
AWS Cloud Practitioner Global Certification

Capstone Projects

Trainer: Aravindraj.G- Nminds Academy

AWS Academy Certified Educator

4. Create an EC2 Linux Instance in AWS

Yogita R,

CSE-Artificial Intelligence & Machine Learning,

Sri Eshwar College of Engineering,

Coimbatore.

Objective

EC2 (Elastic Compute Cloud) is a core service provided by Amazon Web Services (AWS) that enables users to rent virtual servers in the cloud to run applications, store data, or handle computational workloads.

An EC2 Linux instance is a virtual machine running the Linux operating system on Amazon Web Services (AWS) EC2 (Elastic Compute Cloud). This allows you to run Windows-based applications, manage Windows Server configurations, and use various Microsoft software (like SQL Server, Apache,FileServer etc.) in the cloud without having to manage physical hardware.

Use Cases for EC2 Linux Instances:

- Web and Application Hosting: Run Apache web servers or other Linux-based web applications in the cloud.
- Database Servers: Host SQL Server databases with EC2 Linux instances, using SSH or EC2 for more control.
- Remote Desktop Applications: Set up SSH (Remote Desktop Services) for remote access to Linux desktops in the cloud.
- Development and Testing: Create development environments with linux OS to test php,MySql or other Linux-based applications.

Used Services in AWS

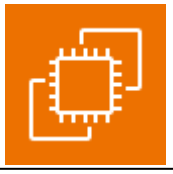

Amazon EC2

Topology

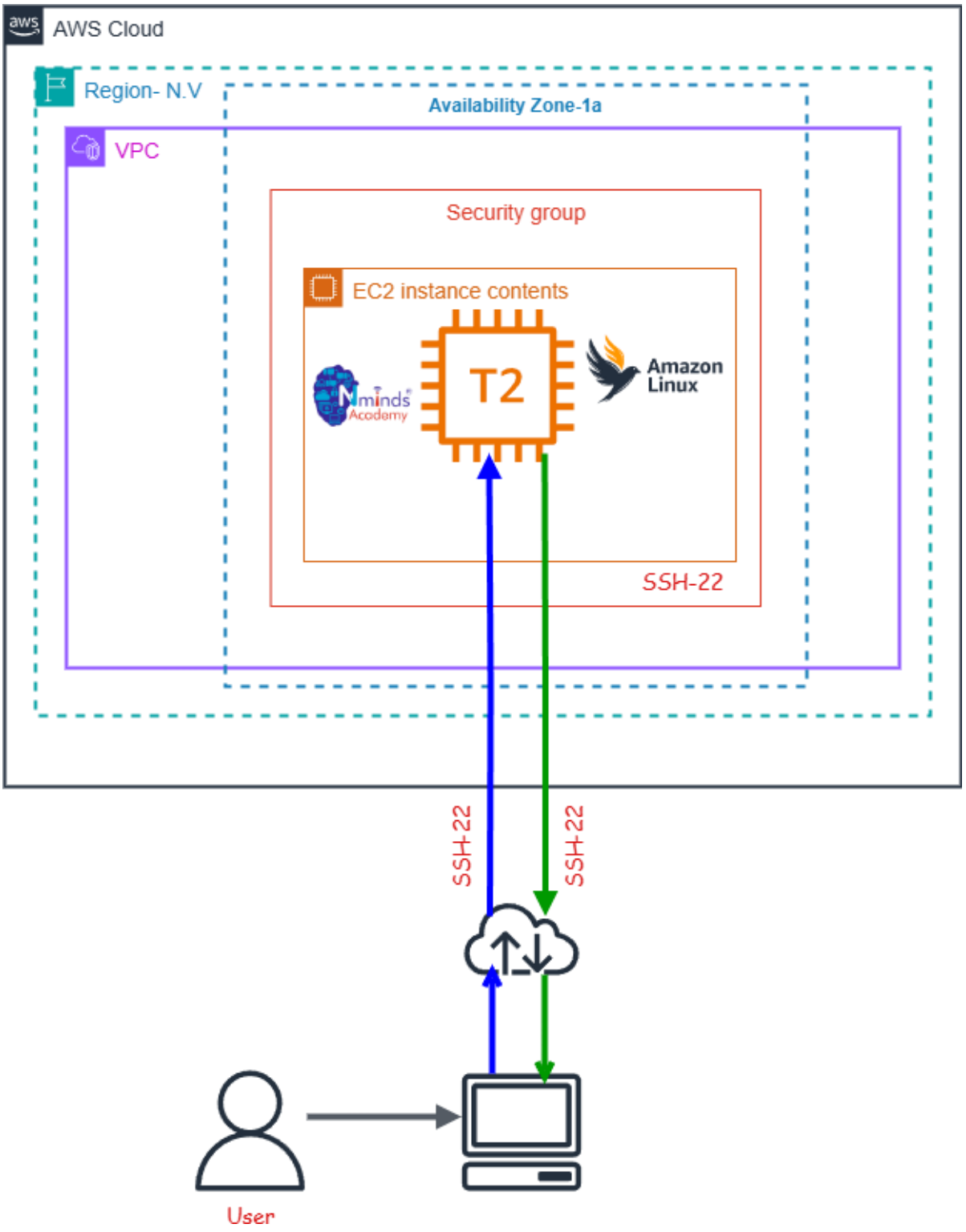
AWS Cloud
Region- N.V
Availability Zone-1a
VPC
Security group
EC2 instance contents
T2
Amazon Linux
SSH-22
SSH-22
SSH-22
User

Execution Tasks:

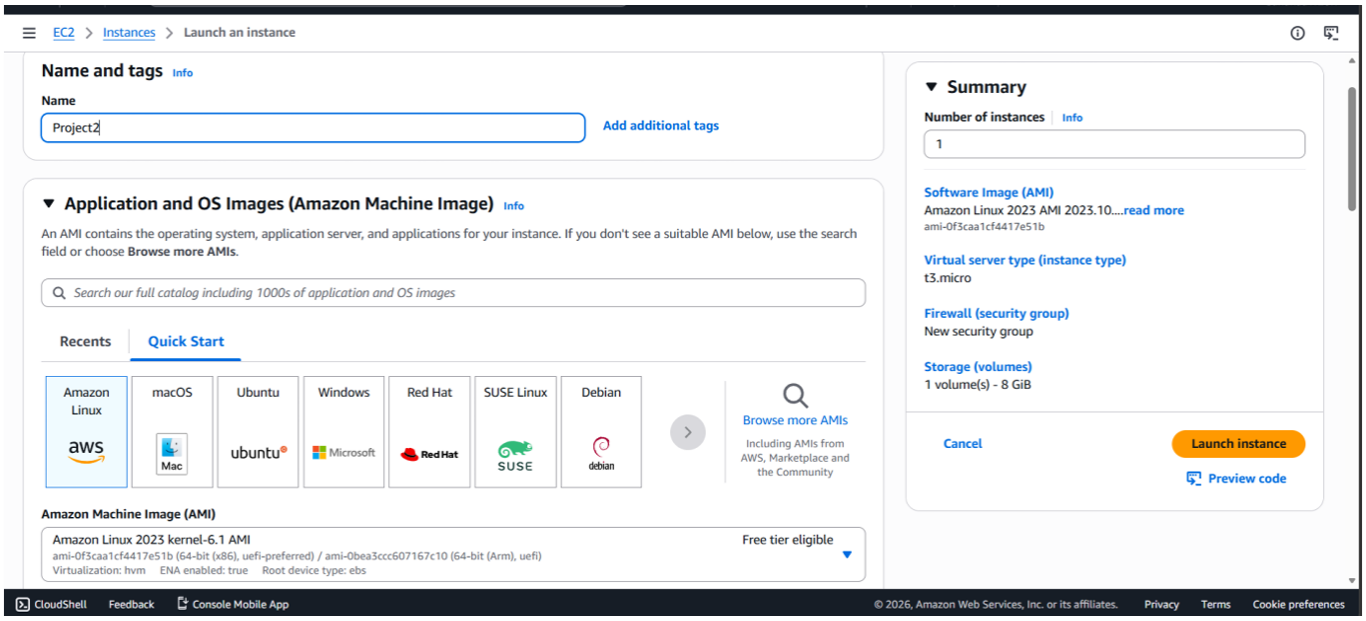

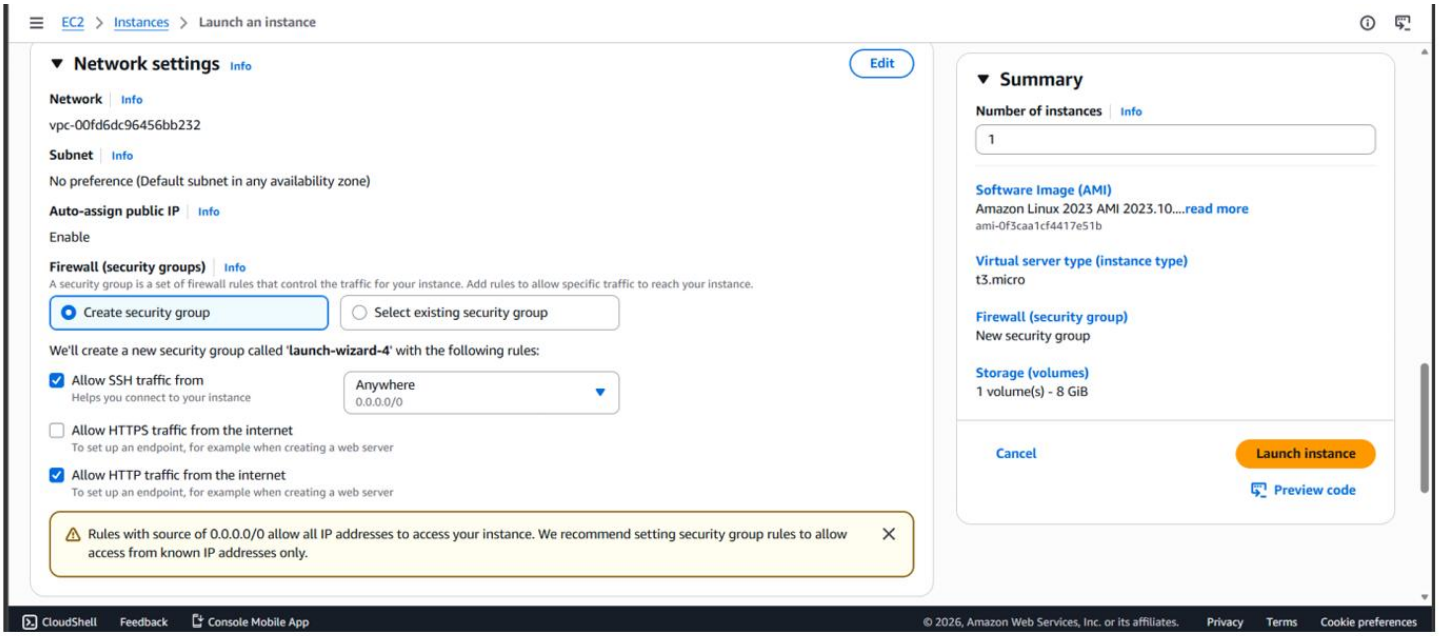

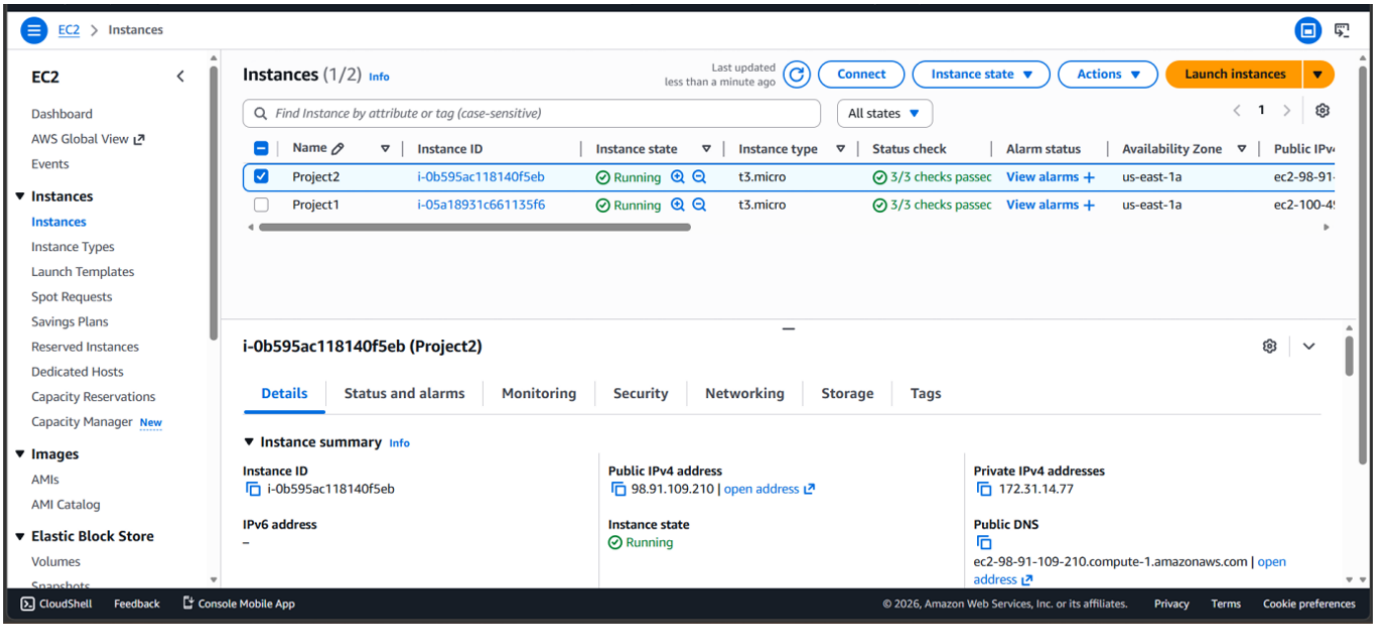
EC2 > Instances
EC2
Dashboard
AWS Global View
Events
Instances
Instances
Instance Types
Launch Templates
Spot Requests
Savings Plans
Reserved Instances
Dedicated Hosts
Capacity Reservations
Capacity Manager New
Images
AMIs
AMI Catalog
Elastic Block Store
Volumes
Instances (1/2) Info
Last updated less than a minute ago
Connect
Instance state
Actions
Launch instances
Find Instance by attribute or tag (case-sensitive)
All states
Name
Instance ID
Instance state
Instance type
Status check
Alarm status
Availability Zone
Public IPv4
Project2
i-0b595ac118140f5eb
Running
t3.micro
3/3 checks passed
View alarms
us-east-1a
Project1
i-05a18931c661135f6
Running
t3.micro
3/3 checks passed
View alarms
us-east-1a
i-0b595ac118140f5eb (Project2)
Details
Status and alarms
Monitoring
Security
Networking
Storage
Tags
Instance summary Info
Instance ID
i-0b595ac118140f5eb
Public IPv4 address
98.91.109.210 | open address
Private IPv4 addresses
172.31.14.77
IPv6 address
–
Instance state
Running
Public DNS
ec2-98-91-109-210.compute-1.amazonaws.com | open address
CloudShell
Feedback
Console Mobile App
© 2026, Amazon Web Services, Inc. or its affiliates.
Privacy
Terms
Cookie preferences